Double Diode Module For Phase Control MDx-155-36-F

Electrically isolated base plate
Industrial standard package
Simplified mechanical design, rapid assembly
Pressure contact

Average forward current		I_{FAV}	155 A	
Repetitive peak reverse voltage		V_{RRM}	3000 ÷ 3600 V	
V_{RRM}, V	3000	3200	3400	3600
Voltage code	30	32	34	36
T_j, °C	- 40 ÷ 150			

MD3		MD4		MD5	
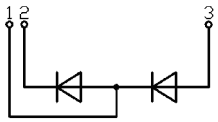		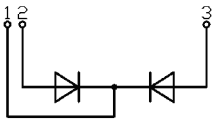		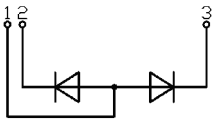	

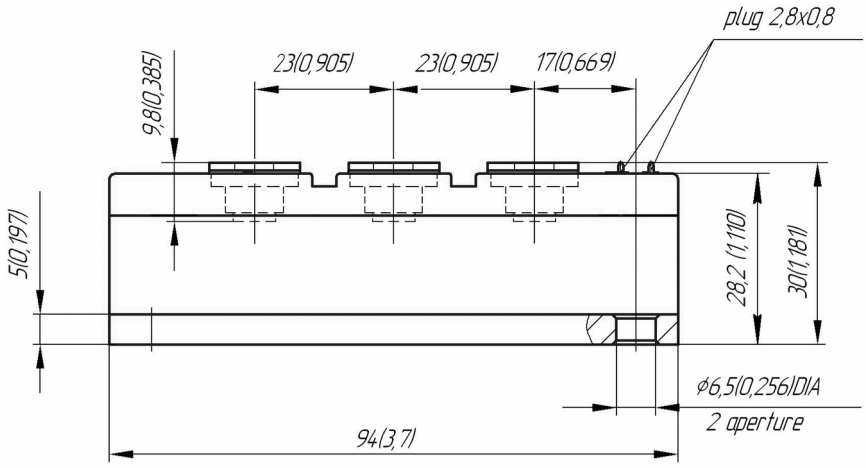

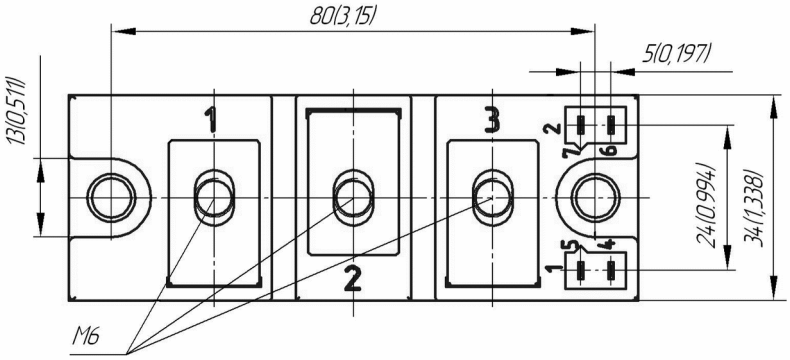

All dimensions in millimeters (inches)

MAXIMUM ALLOWABLE RATINGS

Symbols and parameters		Units	Values	Test conditions	
ON-STATE					
I_{FAV}	Average forward current	A	155	T_c= 100 °C; 180° half-sine wave; 50 Hz	
I_{FRMS}	RMS forward current	A	243		
I_{FSM}	Surge forward current	kA	4.5 5.5	T_j=$T_{j\,max}$ T_j=25 °C	180° half-sine wave; t_p=10 ms; single pulse; V_R=0 V;
			4.5 5.5	T_j=$T_{j\,max}$ T_j=25 °C	180° half-sine wave; t_p=8.3 ms; single pulse; V_R=0 V;
I^2t	Safety factor	$A^2s\cdot10^3$	100 150	T_j=$T_{j\,max}$ T_j=25 °C	180° half-sine wave; t_p=10 ms; single pulse; V_R=0 V;
			80 120	T_j=$T_{j\,max}$ T_j=25 °C	180° half-sine wave; t_p=8.3 ms; single pulse; V_R=0 V;
BLOCKING					
V_{RRM}	Repetitive peak reverse voltages	V	3000÷3600	$T_{j\,min}$< T_j <$T_{j\,max}$; 180° half-sine wave; 50 Hz;	
V_{RSM}	Non-repetitive peak reverse voltages	V	3100÷3700	$T_{j\,min}$< T_j <$T_{j\,max}$; 180° half-sine wave; single pulse;	
V_R	Reverse continuous voltages	V	$0.6\cdot V_{RRM}$	T_j=$T_{j\,max}$;	
THERMAL					
T_{stg}	Storage temperature	°C	- 40 ÷ 50		
T_j	Operating junction temperature	°C	- 40 ÷ 150		
$T_{c\,op}$	Operating temperature	°C	- 40 ÷ 125		
MECHANICAL					
a	Acceleration under vibration	m/s^2	50		

CHARACTERISTICS

Symbols and parameters		Units	Values	Conditions	
ON-STATE					
V_{FM}	Peak forward voltage, max	V	2.00	T_j=25 °C; I_{FM}= 500 A	
$V_{F(TO)}$	Forward threshold voltage, max	V	0.93	T_j=$T_{j\,max}$; 0.5 π I_{FAV} < I_T < 1.5 π I_{FAV}	
r_T	Forward slope resistance, max	mΩ	2.000		
BLOCKING					
I_{RRM}	Repetitive peak reverse current, max	mA	50	T_j=$T_{j\,max}$; V_R=V_{RRM}	
THERMAL					
R_{thjc}	Thermal resistance, junction to case				
	per module	°C/W	0.0950	180° half-sine wave, 50 Hz	
	per arm	°C/W	0.1900		
	per module	°C/W	0.0900	DC	
	per arm	°C/W	0.1800		
R_{thch}	Thermal resistance, case to heatsink				
	per module	°C/W	0.0300		
	per arm	°C/W	0.0600		
INSULATION					
V_{ISOL}	Insulation test voltage	kV	3.00	Sine wave, 50 Hz; RMS	t=60 sec
			3.60		t=1 sec
MECHANICAL					
M_1	Mounting torque (M6)[1)]	Nm	6.00	Tolerance ± 15%	
M_2	Terminal connection torque (M6)[1)]	Nm	6.00	Tolerance ± 15%	
w	Weight, max	g	350		

PART NUMBERING GUIDE	NOTES
MD 3 - 155 - 36 - F - N 1 2 3 4 5 6 1. MD - Rectifier Diode 2. Circuit Schematic 3. Average Forward Current, A 4. Voltage Code 5. Package Type (M.F) 6. Ambient Conditions: N – Normal	[1] The screws must be lubricated
UL certified file-No. E255404	

The information contained herein is confidential and protected by Copyright.
In the interest of product improvement, Proton-Electrotex reserves the right to change data sheet without notice.